M.E.N CONNECTION TO BE AS PER
AS/NZS 3000 AND QECM VER 4 REQUIREMENTS

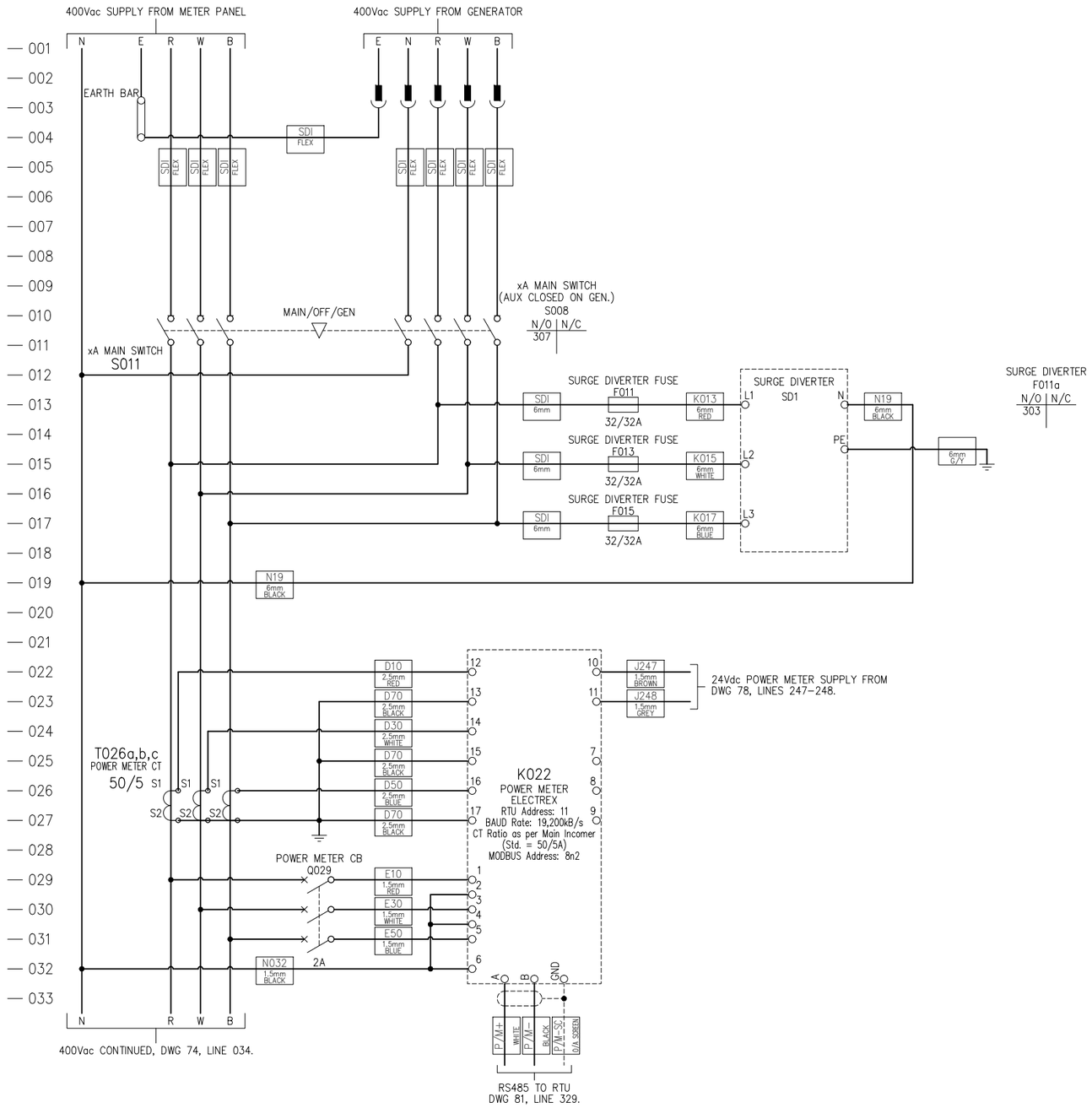

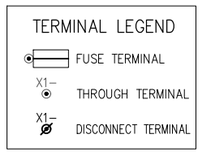

AMENDMENTS

REV	DESCRIPTION	CHECKED	DATE
0	ISSUED FOR REFERENCE		

GLADSTONE REGIONAL COUNCIL

P.O. Box 29, Gladstone Qld. 4680

STANDARD DRAWING
DUAL SEWERAGE PUMP STATION
SWITCHBOARD <4KW VSD
POWER SCHEMATIC 1

DRAWING NO.
GRC-ED-073

A1 SHEET | REVISION | 0

PRINTED ON Friday, 8 August 2025 3:25:37 PM BY Roseben Enriquez