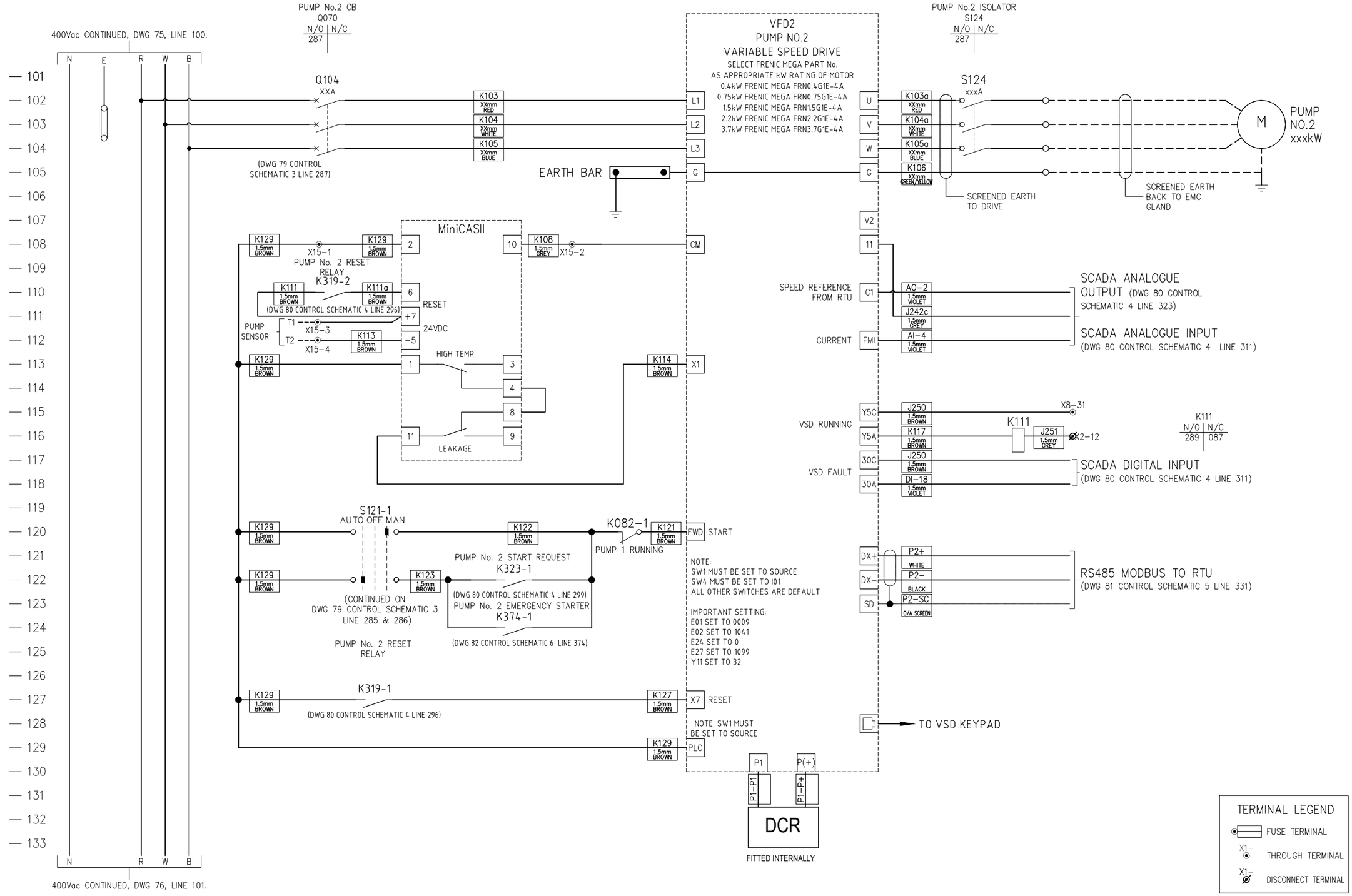

AMENDMENTS

REV	DESCRIPTION	CHECKED	DATE
0	ISSUED FOR REFERENCE		

GLADSTONE REGIONAL COUNCIL

P.O. Box 29, Gladstone Qld. 4680

STANDARD DRAWING
DUAL SEWERAGE PUMP STATION
SWITCHBOARD <4KW VSD
POWER SCHEMATIC 4

DRAWING NO.
GRC-ED-076

A1 SHEET | REVISION 0

PRINTED ON Friday, 8 August 2025 3:25:39 PM BY Roseben Enriquez