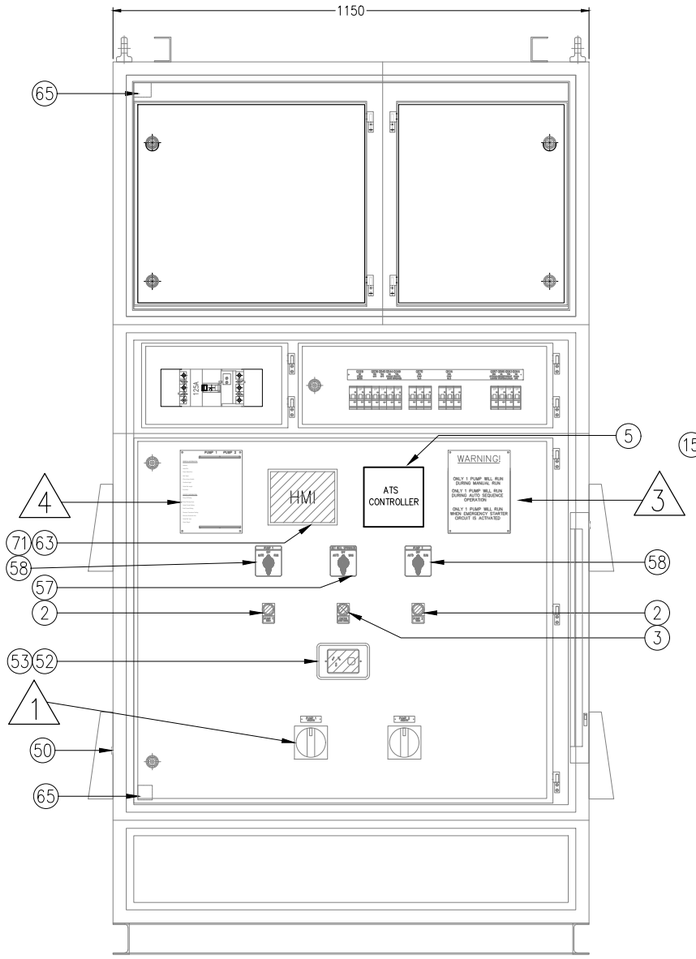

FRONT VIEW

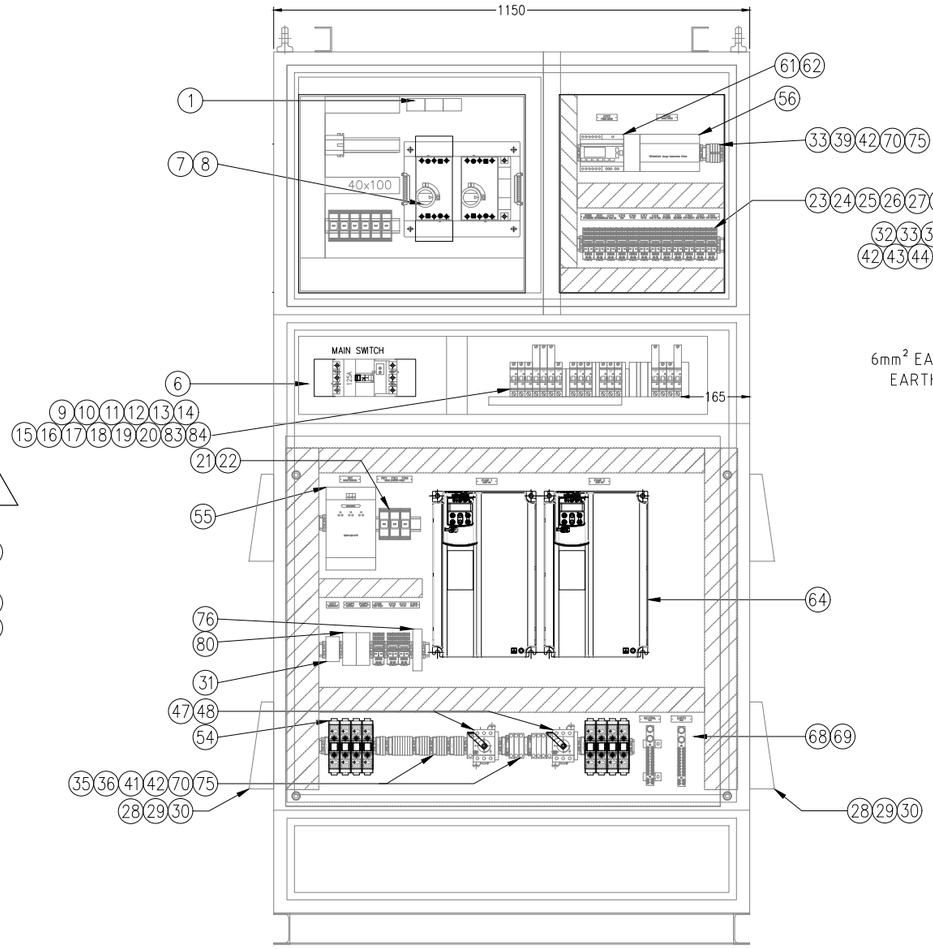

FRONT VIEW

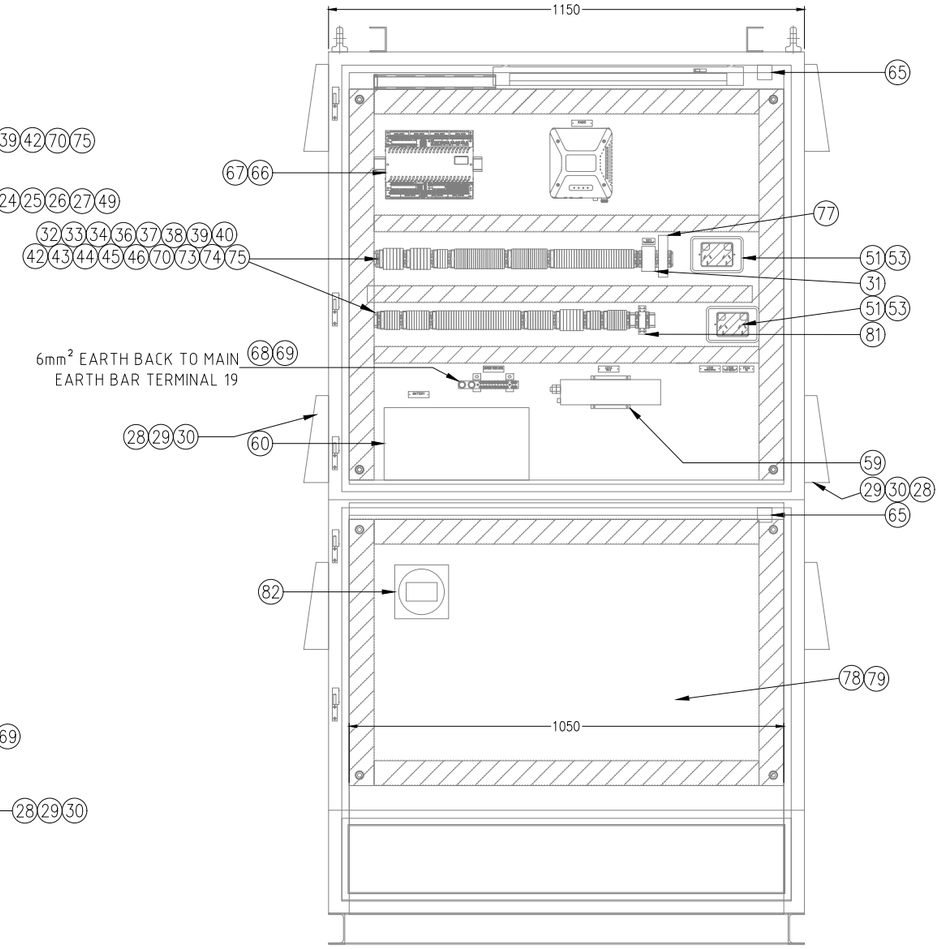

REAR VIEW

×ALL DIMENSIONS ARE FOR GUIDANCE PURPOSE ONLY. THE MANUFACTURER MUST VERIFY THEIR SWITCHBOARD AS PER AS/NZS 61439 REQUIREMENT WHEN APPLICABLE AND AS PER AS/NZS 3000-2018 AND ALL THE RELEVANT STANDARDS AND LOCAL REGULATIONS, QECM AND MIRS.

1

NOTE:
1. ISOLATORS MUST BE INSTALLED WITH THE 'OFF' POSITION AT 12 O'CLOCK & TURNED CLOCKWISE TO 3 O'CLOCK FOR 'ON'.
2. ISOLATOR EXTENSION SPINDLES MUST BE FITTED OFF WITH SUITABLE SUPPORT BRACKETS, REFER TO GRC DRG. GRC-ED-105.
3. TRAFFOLYTE LABEL "WARNING! SINGLE PUMP OPERATION ONLY" REFER LABELS DWG GRC-ED-102
4. TRAFFOLYTE LABEL PUMP INFORMATION REFER LABELS DWG GRC-ED-103 - SUPPLIED BY GRC.
5. THESE PARTS OR THEIR EQUIVALENTS WILL BE ACCEPTED ONLY WHEN A PART AFFECTS SYSTEM INTEGRITY OR COMPATIBILITY WITH EXISTING SYSTEM/NETWORK, THEN THE EXACT PART NEEDS TO BE USED.
6. SIZING OF CIRCUIT BREAKERS AND OTHER EQUIPMENT IS THE RESPONSIBILITY OF THE DESIGNER.

BILL OF MATERIALS

Item	QTY	Description	Manufacturer	Part Number
1	3	Current Transformer 120/5	NHP	251-4120
2	2	Push Button Assembly Blue	NHP	D7P-F6-PX10
3	1	Pilot Light Red LED 240VAC Kit	NHP	D7P-P4-PN7R
4	2	Laptop Lectern	B&R	iLINQ
5	1	ATS Controller	NHP	ATS C55
6	1	MCCB	NHP	
7	2	xA 3P/3P for ATS - MCCB	NHP	SxxNJ
8	2	T2 Motor 240VAC xxxAF For TS	NHP	T2MCxxA24NB
9	3	6A 1 Pole MCB	NHP	DTCB10106C
10	2	10A 1 Pole MCB	NHP	DTCB10110C
11	1	2A 3 Pole MCB	NHP	DTCB10302C
12	2	xA 3 Pole MCB C/D Curve (Sized to suit drives)	NHP	DTCB10325D
13	2	20A 1 Pole 30mA RCBO	NHP	DSRCBH2030
14	1	16A 1 Pole 30mA RCBO	NHP	DSRCBH1630
15	1	6A 1 Pole 30mA RCBO	NHP	DSRCBH0630
16	1	10A 1 Pole 30mA RCBO	NHP	DSRCBH1030
17	1	2A 1 Pole MCB	NHP	DTCB1012C
18	5	AUX For MCB	NHP	DTAUXAL
19	11	MCB Lockouts	NHP	DTLLA
20	1	x Way Phase Bus comb	NHP	ICL183
21	3	xA Fuse Holder	NHP	NV32FW
22	3	xA Fuse	NHP	NNS32
23	1	6A 2 Pole DC MCB	NHP	DTCBDC206C
24	9	Control Relay 24VDC 4 Pole	NHP	
25	2	Control Relay 240VAC 4 Pole	NHP	55.34.0074240VAC
26	11	Control Relay Bases 4 Pole	NHP	94.04
27	11	Control Relay Retaining Clip	NHP	94.71
28	4	Cubicle Fan 24V DC	NHP	GVK_1500211 24VDC

BILL OF MATERIALS

Item	QTY	Description	Manufacturer	Part Number
29	6	Cubicle Fan Grill	NHP	GHF15
30	4	Filter Mat	NHP	AVAFAGN15
31	2	Thermostats	NHP	KTS01141
32	As Req	Fuse Terminals	NHP	V7WFB4
33	As Req	Through Terminals	NHP	V7W4
34	As Req	Disconnect Terminals	NHP	V7WKD3
35	10	Motor Terminals	NHP	V7W35
36	As Req	Through Terminal 2 Way Links	NHP	V7CJ62
37	As Req	Disconnect Terminal 10 Way Links	NHP	V7SJ510
38	As Req	Fuse Terminal 10 Way Links	NHP	V7SJFB810
39	As Req	Through Terminal End Plates	NHP	V7EB3
40	4	Disconnect Terminal End Plates	NHP	V7EBKD3
41		Empty Line		
42	As Req	Through Terminal Nos 1-10	NHP	V7SM6X12H01
43	As Req	Through Terminal Nos 11-20	NHP	V7SM6X12H02
44	As Req	Through Terminal Nos 21-30	NHP	V7SM6X12H03
45	As Req	Through Terminal NOS 31-40	NHP	V7SM6X12H04
46	As Req	Fuse & Disconnect Terminal NOS 1-10	NHP	V7SM5X9H01
47	2	Motor Isolator xA	SOCOMEC	SLBM633P
48	2	Motor Isolator AUX	NHP	22990001
49		Empty Line		
50	1	Cubicle Light	PHILLIPS	PHITWG114/2005
51	2	10A GPO	Clipsal	2015WE
52	1	15A GPO	Clipsal	2015/15WE
53	3	Mounting Block	Clipsal	449AWE
54	16	Bolt type screw terminal with shroud - WFF 35/AH	Weidmuller	1029300000
55	1	Surge Diverter	MULTIMOV	SDN3-100-275
56	1	Surge reduction filter	ECO	TDS-10A-240V

BILL OF MATERIALS

Item	QTY	Description	Manufacturer	Part Number
57	1	Auto/Off/Man Selector Switch & add on plate	Kraus Naimer	CA10-A211-623-FT2 & F991/A1B-PRC
58	2	Auto/Off/Run Selector Switch & add on plate	Kraus Naimer	CA10-A212-600-FT2 F* AU178T1 & F991/A1B-PRC
59	1	24V DC	SNAPTEC	MXU-24-10
60	2	Battery 12V 65Ah	PANASONIC	LC-P1265
61	1	Electrex Flash-D Power Meter D6-24	CONTROL LOGIC	Electrex PFNE6 1H707-ØMØ
62	1	Electrex Flash-D Power Meter RS485 Comms	CONTROL LOGIC	
63	1	HMI	SCHNEIDER	HMIGT02310
64	2	Frenic-MEGA VSD (To be sized to suit pumps)	FUGI	FRNXX.XG1-4A
65	4	Limit Switch	SCHNEIDER	XCJ128
66	1	RTU w/ Operation Board	Scada Pack	TBUP474-UA50-BB00S
67	1	SCADA PACK 474 Expansion Board	Scada Pack	6607 TBUX297592S
68	3	Brass Earth & Neutral Bar	DORE ELECTRICS	1.65E+26
69	4	Neutral Feet	DORE ELECTRICS	E/N FEET
70	As Req	Terminal End Spots	NHP	V7-EA35
71	1	CAT 6 - Cross over Patch Lead 3 Meter	Panduit	
72		Empty Line		
73	1	Fuse 15A 5x20mm	RS Components	385-9316
74	12	Fuse 5A 5x20mm	RS Components	488-8359
75	As Req	Marker Carrier	NHP	V7-GM-35
76	1	Level Controller Safe-TL	Multitrode	84800112
77	1	Level Relay Safe-FS	Multitrode	84800110
78	1	Level Failsafe Probe Single Sensor	Multitrode	84800001
79	1	Level Failsafe Probe Three Sensor	Multitrode	84800005
80	2	MiniCAS II	Flygt	835857
81	1	Surge Arrester	Endress & Hauser	
82	1	ABB Water Master	ABB	FET1211AOY1AZAI
83	4	1/2 Module Spacer	NHP	DTSP
84	3	Bus comb Terminal Pin 25mm2	NHP	DTTAX25PN

AMENDMENTS

REV	DESCRIPTION	CHECKED	DATE
0	ISSUED FOR REFERENCE		

GLADSTONE REGIONAL COUNCIL

P.O. Box 29, Gladstone Qld. 4680

STANDARD DRAWING
DUAL SEWERAGE PUMP STATION
SWITCHBOARD 4-22KW VSD
EQUIPMENT ARRANGEMENT 4

DRAWING NO.
GRC-ED-091

A1 SHEET | REVISION | 0

PRINTED ON Friday, 8 August 2025 3:22:03 PM BY Roseben Enriquez