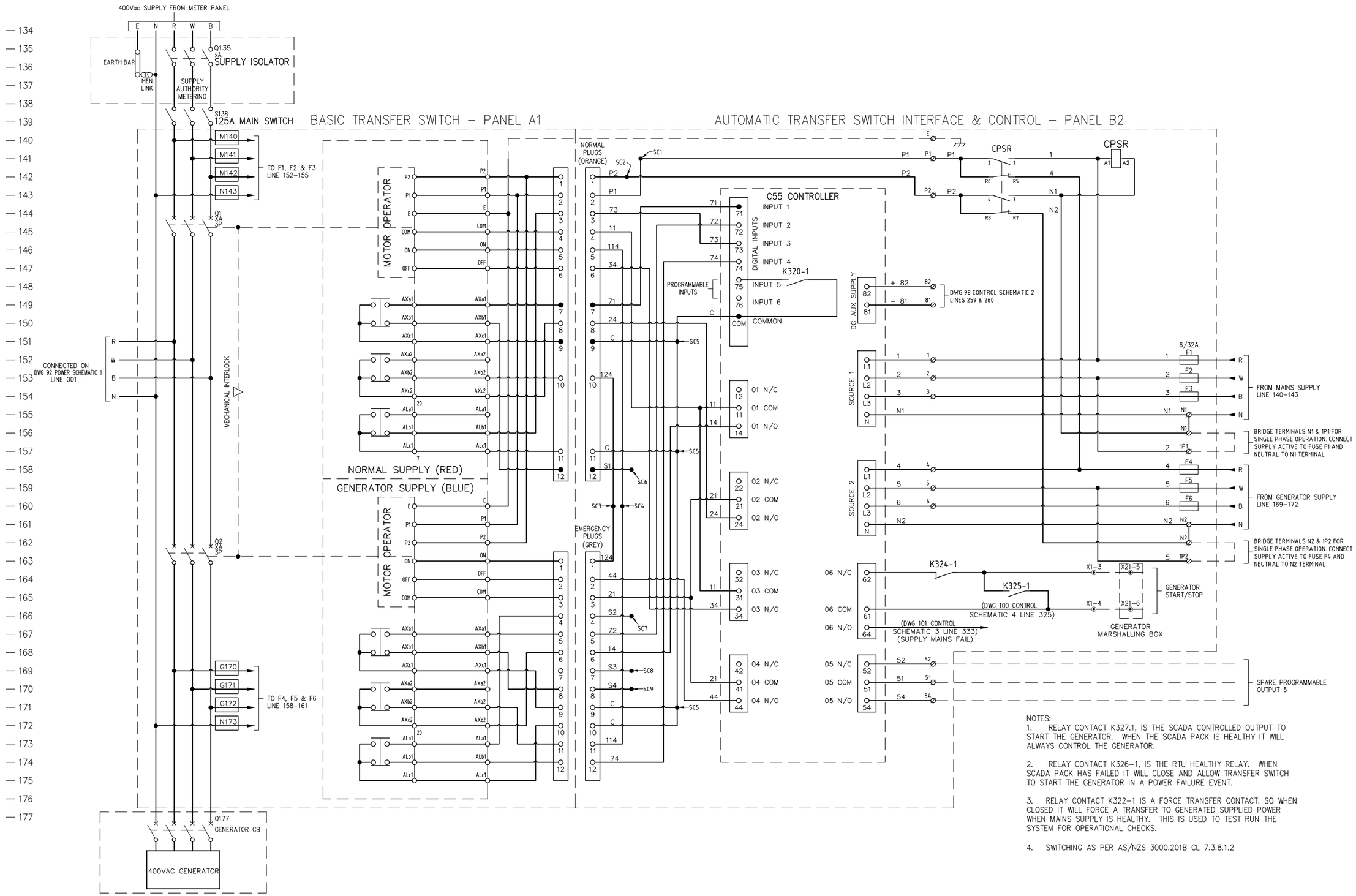

NOTES:

1. RELAY CONTACT K327.1, IS THE SCADA CONTROLLED OUTPUT TO START THE GENERATOR. WHEN THE SCADA PACK IS HEALTHY IT WILL ALWAYS CONTROL THE GENERATOR.

2. RELAY CONTACT K326–1, IS THE RTU HEALTHY RELAY. WHEN SCADA PACK HAS FAILED IT WILL CLOSE AND ALLOW TRANSFER SWITCH TO START THE GENERATOR IN A POWER FAILURE EVENT.

3. RELAY CONTACT K322–1 IS A FORCE TRANSFER CONTACT. SO WHEN CLOSED IT WILL FORCE A TRANSFER TO GENERATED SUPPLIED POWER WHEN MAINS SUPPLY IS HEALTHY. THIS IS USED TO TEST RUN THE SYSTEM FOR OPERATIONAL CHECKS.

4. SWITCHING AS PER AS/NZS 3000.201B CL 7.3.8.1.2

AMENDMENTS

REV	DESCRIPTION	CHECKED	DATE
0	ISSUED FOR REFERENCE		

GLADSTONE REGIONAL COUNCIL

P.O. Box 29, Gladstone Qld. 4680

STANDARD DRAWING
DUAL SEWERAGE PUMP STATION
SWITCHBOARD 4-22KW VSD
AUTOMATIC TRANSFER SWITCH SCHEMATIC

DRAWING NO.
GRC-ED-096

A1 SHEET | REVISION 0

PRINTED ON Wednesday, 1 October 2025 12:37:12 PM BY Roseben Enriquez